ZONE	REV.	DESCRIPTION	APPROVAL	DATE
3				
2				
1				

RoHS Compliant

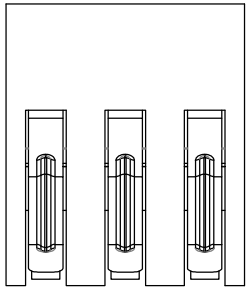

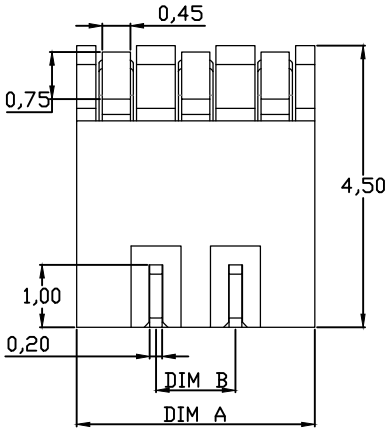

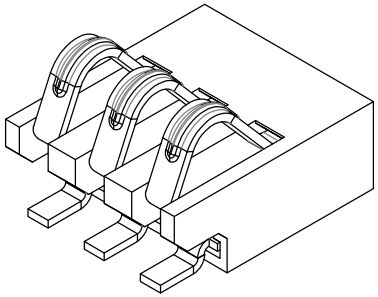

PART NO.	DIM A	DIM B
KH-12701-2P225		
KH-12701-3P225		1.27
KH-12701-4P225	5.08	2.54
KH-12701-5P225	6.35	3.81
KH-12701-6P225	7.62	5.08

2.54
3.81

Performance:

Rated current: 1.0A
Rated voltage: 12V
Withstand voltage: 500V
Contact resistance: 30mΩ MAX
Insulation resistance: 500MΩ
Operating temperature: -40 ~ +85°C
Plastic part (Material): LCP E130I
Contact point (Material): Copper alloy, contact gold-plated 3μm

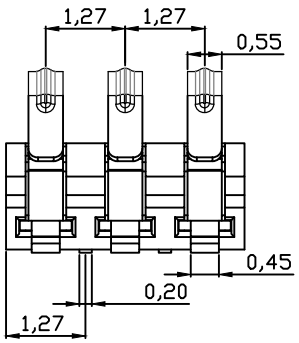

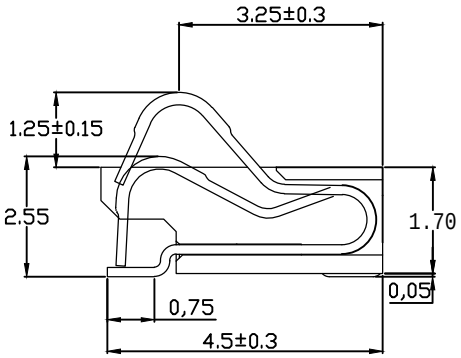

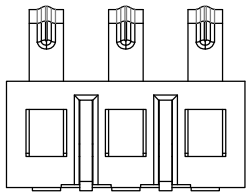

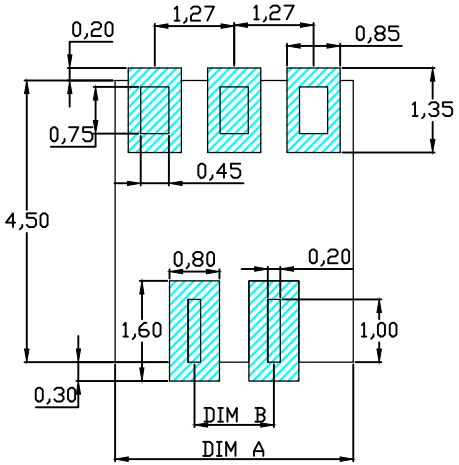

RECOMMENDED PCB LAYOUT

TOP VIEW(.XX±0.05)

Shenzhen Kinghelm Electronics Co., Ltd		DESIGN	X. Z. Huang	SCALE		TOLERANCE	PART NAME: Battery Holder
		DRAWING	X. Z. Huang	UNIT	mm	X. ±0.35	PART NO.: KH-12701 Series
KH-12701-4P170	www.kinghelm.net	CHECK	X. X. Zheng	SIZE	A4:210:297	X.X ±0.25	DWG. NO: RBD-SP-0019
		APPROVAL	M. Y. Li	VER.	01	X.XX ±0.15	DATE: 2019-11-04
						ANGLE ±3°	