Kinghelm®

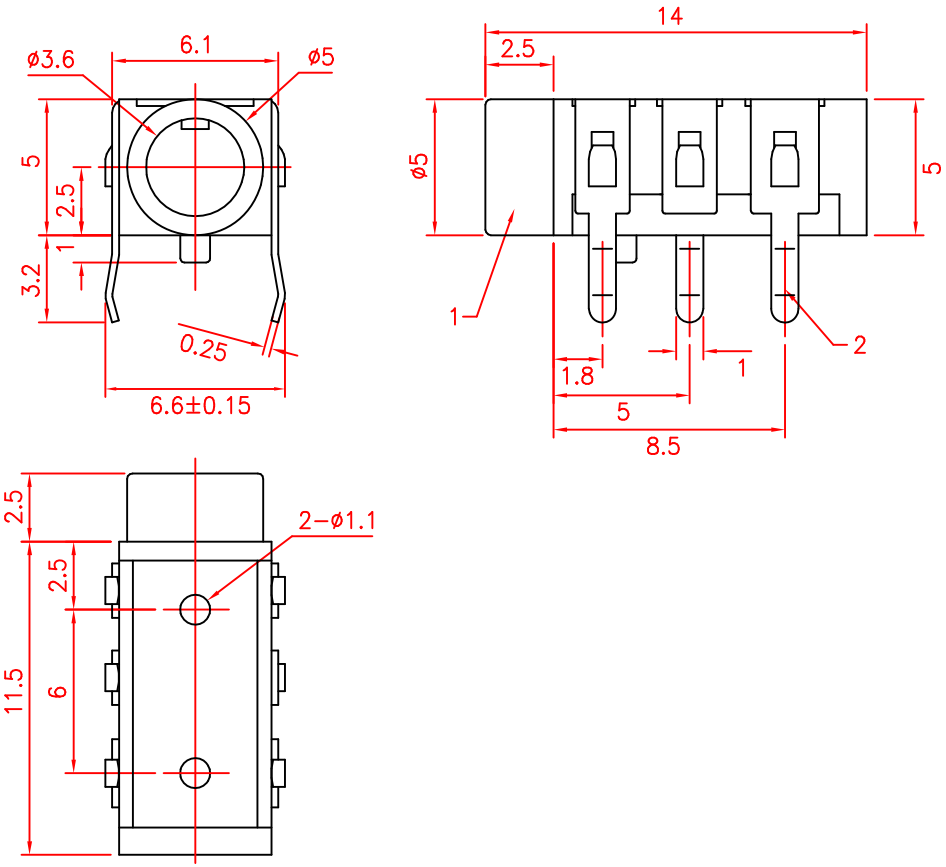

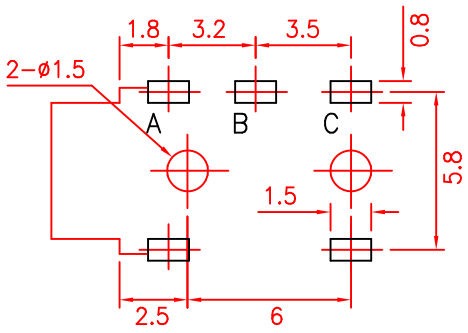

Schematic Diagram of
Printed Circuit Board (PCB) Holes

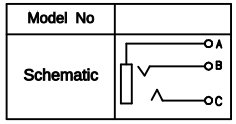

No.	Name	Material	Quantity	Plating/Color	
			1		
1			1		REVISION
2			1		DRAWN 15-6/12
3	Contact Tab	Phosphor Bronze Strip T=0.25	3	Silver Plating	DES' D 15-6/12
4	Base	PC	1	Black	CHK' D 15-6/12
					APP' D 15-6/12

GENERAL TOLERANCE

X.X	±0.1
X.XX	±0.05
X.XXX	±0.005

ANGLE TOLERANCE

X.°	±5.0°
X.X°	±3.0°
X.XX°	±1.0°

Shenzhen Kinghelm Electronics Co., Ltd.

KH-PJ-313 | www.kinghelm.net

Earphone Socket KH-PJ-313

UNIT	SHEET	SCALE	REV
mm	1/1	4:1	A