RoHS COMPLIANT

Kinghelm®

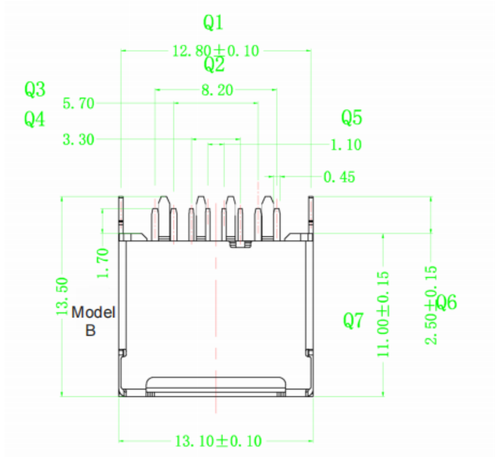

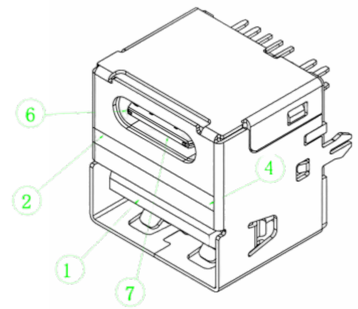

Notes:

1. Mechanical Performance:

1.1 Insertion Force: 5~20N.

1.2 Withdrawal Force: 5~20N

1.3 Durability: 1000 CYCLES.

2. Electrical Performance:

2.1 Rated Current: 5A MAX.

2.2 Rated Voltage: 30V MAX.

2.3 Withstand Voltage: 100V AC.

2.4 Contact Resistance: 40mΩ MAX (Initial), 50mΩ MAX (after 5,000 cycles).

2.5 Insulation Resistance: 100MΩ MIN.

3. Environmental Temperature:

3.1 Temperature Range: -30°C ~ +85°C.

3.2 Salt Spray: 24 hours.

4. Dimensional Markings:

Marked with " QXX " indicates FAI dimensions.

Marked with " C " indicates critical inspection dimensions.

Marked with " CPK " indicates CPK inspection dimensions.

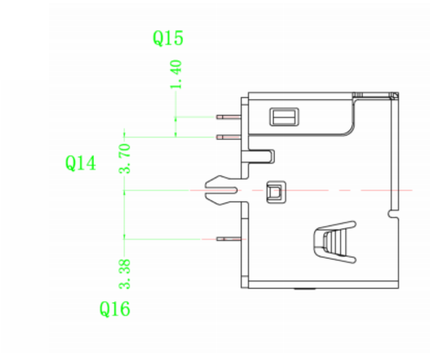

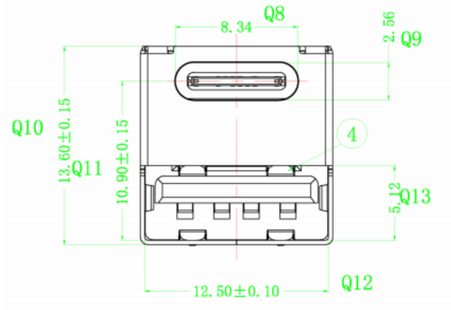

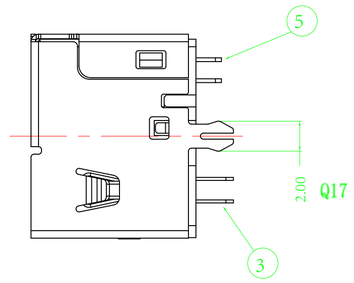

UT20FJ014 SX 02ZA

S0:G/F Gold In Contact Area
100u" Tin In Tail Area
S1:1U" Gold In Contact Area
100u" Tin In Tail Area
S3:3u" Gold In Contact Area
100u" Tin In Tail Area
S4:5u" Gold In Contact Area
100u" Tin In Tail Area
S5:15u" Gold In Conta
ct Area
100u" Tin In Tail Area
S6:30u" Gold In Contact Area
100u" Tin In Tail Area

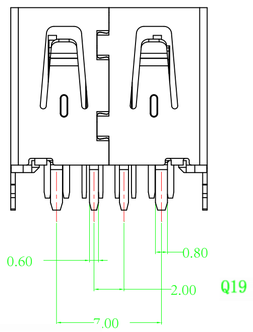

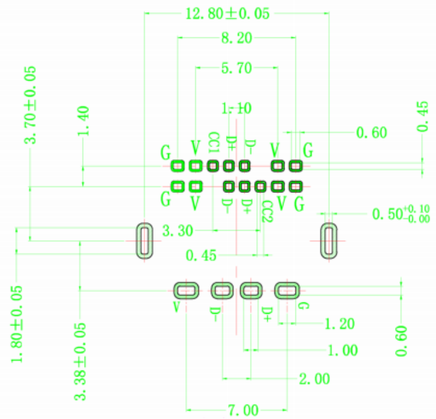

Recommended P.C.B Layout

Tolerance:±0.05

PIN DEFINITION

FRONT VIEW

A12	A11	A10	A9	A8	A7	A6	A5	A4	A3	A2	A1
GND			VBus		D-	D+	CC	VBus			GND
GND			VBus	Vconn				VBus			GND
B1	B2	B3	B4	B5	B6	B7	B8	B9	B10	B11	B12

Serial Number	Description	Material	Color	Remarks
7	Type C Molding	LCP+30GF	BLACK	UL 94V-0
6	Type C Center Piece	SUS201-H		
5	Type C Terminal	C2680-H	——	Plated: G/F Tin 80-120u"Ni:30u"
4	Intermediate Layer	SUS201-1/4H	——	
3	USB Terminal	C2680-H	——	Plated: G/F Tin 80-120u"Ni:30u"
2	Shell	C2680-H/SPCC	——	Ni :40-60"
1	Main Body Core	LCP+30GF	BLACK	UL 94V-0

General Tolerance			
DIM	TOL	AMG	TOL
X.	±0.5	X.	±0.5
.X	±0.3	.X	±0.3
.XX	±0.2	.XX	±0.2
.XXX	±0.1	.XXX	±0.1

ECN(DCN) NO.	Version	Description of Content	Date	Change	Approval
	A	Original Release	21-03-10		Bai hualin

Material		Shenzhen Kinghelm Electronics Co., Ltd.	www.kinghelm.net
Material Specification		KH-TYPE-14P+USB-Z-B	
Drawing	Bai min	Product Name	Type-C Female Socket 14PIN + USB 2.0 Female Single-sided Dual-in-one, 180-degree Iron Shell Black
Design	Xu bo	Item Number	UT20FJ014S004ZA
Review	Deng yuanjie	Drawing Number	Version A
Approval	Bai hualin	Unit MM	Scale 1:1 · Page Number 1/1 · Perspective