Kinghelm®

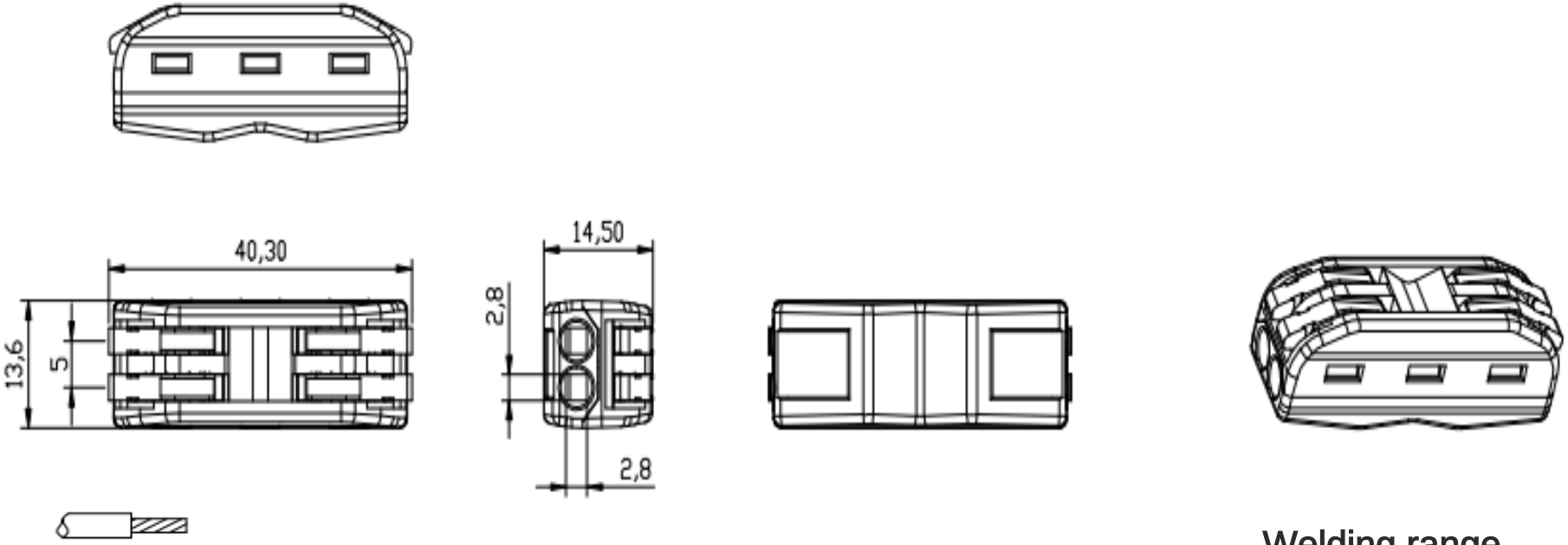

9-10mm/0.39in

Welding range

Hard wire: 0.08 - 4.0mm²
Soft wire: 0.08 - 2.5mm²
Voltage: 400V
Current: 32A

Shenzhen Kinghelm Electronics Co., Ltd.		Tolerance		Name		Unit	mm		
KH-PCT-222	www.kinghelm.net	0,000 0,00 0,0	±0,05 ±0,10 ±	KH-PCT-222		Proportion	1:1	Customization Date	2019-02-19
		0,				View			
		ANGLE	±1°			REV	A0		