Kinghelm®

REVISION RECORD				
REV	ECO	DESCRIPTION	DRFT	

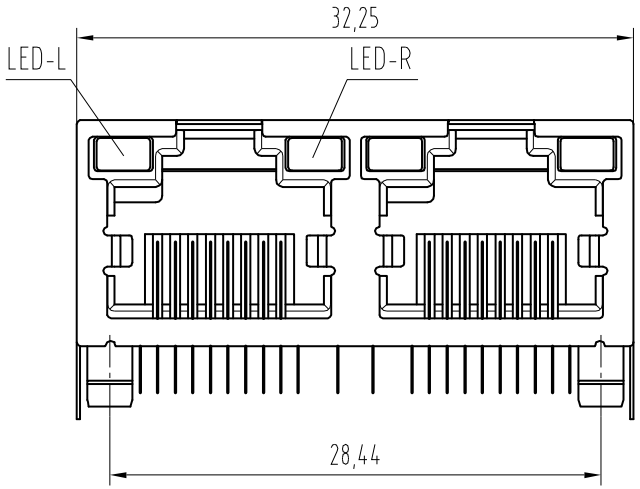

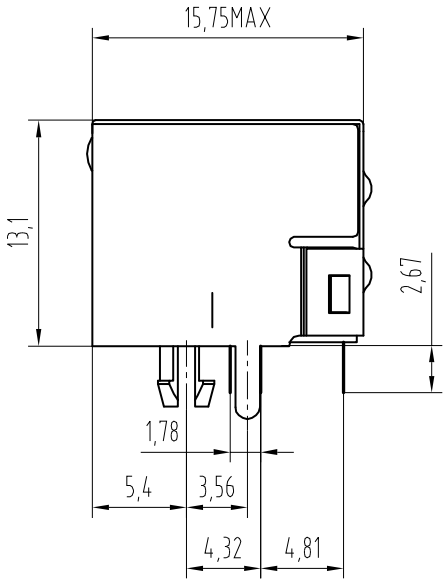

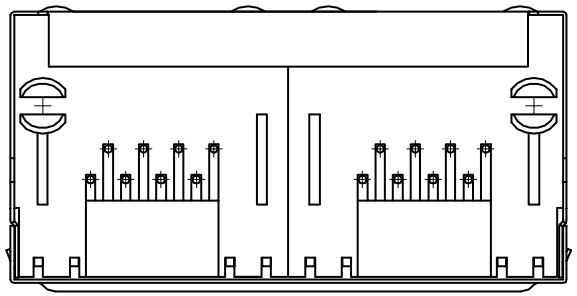

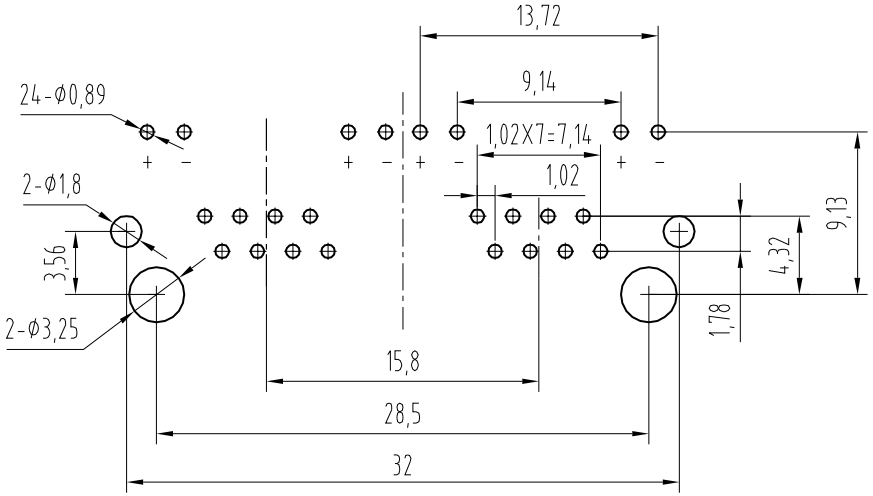

PC Board Layout

Component Side Shown

NOTES:

MATERIAL :

1.HOUSING MATERIAL	:GLASS FILLED POLYESTER UL94V-0.
2.CONTACT MATERIAL	:PHOSPHOR BRONZE Φ0.46mm.
3.PLATING	:GOLD PLATING OVER NICKEL.
4.SHIELD	:0.20mm THICKNESS COPPER ALLOY WITH NICKEL PLATED.
5.LED	:OPTION

ELECTRICAL:

1.VOLTAGE RATING	:125 VAC RMS.
2.CURRENT RATING	:1.5 AMP.
3.CONTACT RESISTANCE	:30 MILLIOHMS MAX.
4.INSULATION RESISTANCE	:500 MEGOHMS MIN @ 500V DC .
5.DIELECTRIC WITHSTANDING RESISTANCE	:1000V AC RMS 50Hz. 1MIN.

MECHANICAL:

1. DURRABILITY	:750 CYCLES MIN.
2.PCB RETENTION PRE-SOLDER	:1 LB MIN.

ENVIRONMENTAL:

1. STORAGE	: -40℃~+85℃
2. OPERATION	: 0°C TO 70°C.

PART NUMBER:

ZP5JA X X – X X X X X X X X

5J SERIES 1XN LED JACK

POSITIONS	CONTACTS	PORTS	LED STYLE	SHIELD	BACK PEG	PLASTIC	LOGO	GOLD PLATING
8-8 POSITIONS	4-4 CONTACTS 6-6 CONTACTS 8-8 CONTACTS	1-1X1 2-1X2 4-1X4 5-1X5 6-1X6 8-1X8	0-W/O LED 1-Y/G 2-G/Y 3-R/G 4-G/R 5-Y/Y 6-G/G 7-OTHERS	0-W/O SHIELD 1-SHIELD W/ EMI 2-SHIELD W/O EMI	0-W/O BACK PEG 1-1 BACK PEG 2-2 BACK PEG	1-PBT 2-NYLON66 3-NYLON46	0-W/O LOGO 1-W/ ZPY 2-W/ UL 3-W/ ZPY&UL	1-1.5u" 2-3u" 3-6u" 4-15u" 5-30u" 6-50u"

MM
INCHI

TOLERANCES EXCEPT AS NOTED

MM	
.X ± 0.15	±
.XX ± 0.075	±
.XXX ± 0.05	±

ANGLES ± 0.5

THIRD ANGLE PROJECTION

DETACHED LISTS

DFTO SHB	DATE 2008.03.05		
CHKD LANBO	DATE 2008.03.05		
MFD	DATE		
APPVL	DATE		
MATERIAL :			
QT'Y :			
FINISH :			
SCALE :			

SHENZHEN KINGHELM ELECTRONIC CO., LTD.

WWW.BDS666.COM

KH-56-8P8C-1X2-D

0755-83044319

TITLE

5JA SERIES 1X2 LED JACK SHIELDED

DRAWING NO. TE5JA1006

/PART NO.

SIZE A3

DO NOT SCALE DRAWING

SHEET X OF

8 7 6 5 4 3 2 1